ARTICLE XIV

SIGN REGULATIONS

SECTION 14.1 SHORT TITLE: This Article shall be known as the Sign Article of the City of Elsmere.

SECTION 14.2 PURPOSE AND INTERESTS SERVED

A. The purpose of this Article is to establish a comprehensive scheme for the regulation of signs within the jurisdiction of the City of Elsmere. These regulations are designed to protect and promote the public health, safety and welfare by controlling the type, number, location and physical dimensions of signs, to prevent the disruptions, obstructions and hazards to vehicular and pedestrian traffic that signs may cause, and to enhance the quality of the environment in residential and nonresidential districts.

As a basis for adopting these regulations, the City of Elsmere finds:

1. Signs are an essential form of communication in the built environment, providing way-finding guides to residents, visitors, public safety officials, customers and potential customers of local businesses, delivery people and others.
2. Signs also provide communication on public issues, as the U.S. Supreme Court found in City of LaDue v. Gilleo: Signs that react to a local happening or express a view on a controversial issue both reflect and animate change in the life of a community. Often placed on lawns or in windows, residential signs play an important part in political campaigns, during which they are displayed to signal the resident's support for particular candidates, parties, or causes. They may not afford the same opportunities for conveying complex ideas as do other media, but residential signs have long been an important and distinct medium of expression.
3. Retailers and other businesses depend on signs to help people find their businesses, and, in a large and expensive media market like that of Cincinnati (a market which includes Elsmere), many small businesses depend on signs as one of the most affordable forms of advertising.
4. Although signs thus serve many important purposes in society in general and in Elsmere in particular, there are other considerations that the City of Elsmere weighs heavily.
5. Signs may distract drivers and lead to deaths and injuries to pedestrians and cyclists as well as to drivers and passengers and to property damage. Moving, flashing and rapidly changing signs are particularly distracting to drivers. A proliferation of signs on a particular site can have the same

effect as moving signs, as drivers try to sort through the visual cacophony to find the information that they want or need.

6. The Elsmere City Council, with the advice of the Kenton County Planning Commission and its professional staff, and with input from residents through the Direction 2030: Your Voice. Your Choice. planning process, has placed an increasing emphasis on preserving the sense of place and the design of the built environment; limiting the size, height and number of signs is an important tool in preserving a sense of place, a tool that accompanies the County's standards for landscaping.
7. Direction 2030: Your Voice. Your Choice. recommends that policies, regulations and incentives be developed and implemented that preserve and improve the existing community fabric.
8. Balancing these competing considerations is particularly difficult in residential areas, where people value both their pleasing and visually appealing environments and their ability to communicate their opinions regarding candidates and public issues through yard signs.
9. In updating its ordinance in 2016 after the Supreme Court's landmark decision in Reed v. Town of Gilbert, the Elsmere City Council, working with PDS staff and an outside consultant, has made a major effort to limit content as a factor in its sign regulations. After due consideration, however, it has concluded that one way to leave room for extensive free expression through signs in residential areas while limiting total sign clutter is to maintain significant limits on commercial signs in residential areas. Recognizing the importance of "for sale" and "for lease" signs in maintaining the occupancy of healthy neighborhoods (see the U.S. Supreme Court decision in Linmark Associates, Inc. v. Willingboro), those signs must remain. There is a similar utility in providing for yard sale signs, which allow people to dispose of unwanted items without sending them to a landfill.
10. Although as the Court found in Reed v Gilbert, time limits on signs can be arbitrary, as the Court recognized in 2009 in Pleasant Grove v. City of Summum, a significant distinction between speakers expressing an opinion and signs is that "Speakers, however long-winded, will eventually come to the end of their remarks." Members of the Elsmere City Council have long noted that signs for political campaigns as well as those advertising pancake breakfasts and spaghetti dinners for civic organizations are often abandoned after the events, contributing to clutter long after they have served their purpose. Although such signs were once typically paper or cardboard that would eventually decay, many today are plastic and will remain until removed. Thus, despite the expressed concern of the Supreme Court with time limits, the Elsmere City Council finds that it has a substantial governmental interest in clarifying the status of signs for past events that thus no longer serve a purpose so that there is a legal basis for the City of Elsmere to remove them or force their removal.

11. The City of Elsmere has long allowed unlimited numbers of small signs bearing non-commercial messages to allow merchants and others to designate handicapped parking places, provide directions to ATMs and restrooms, warn of guard dogs and other hazards and provide a variety of other place-based information. With the prohibition of commercial messages on such signs, it has been the observation of Elsmere City Council members and their professional staff members that property owners are judicious and appropriate in posting such signs. The City of Elsmere thus finds that it has a substantial interest in allowing merchants and property owners freely to post necessary informational signs but without allowing an endless proliferation of commercial messages.
12. Although in findings above the City of Elsmere has recognized the multiple values of signs in the built environment, Elsmere officials after consultation with the Planning Commission and representatives of cities and towns in the County concluded several years ago that there is no place for signs of overwhelming size and no relation to context in an urban and urbanizing environment like Elsmere. Although previous versions of these regulations followed the pattern of state and federal laws by defining such billboard as “off-site” signs, this ordinance addresses the same issue by establishing a form of circuit breaker size limit, prohibiting very large signs on small lots, on vacant lots, or on lots with only small buildings.
13. These are complex public policy issues, and the Elsmere City Council with the help of its professional planners, attorneys and outside consultant, has attempted to balance the competing considerations in a way that it believes best protects the public health, safety and welfare of the citizens of Elsmere, including its many valued businesses and the thousands of visitors who arrive or pass through the City of Elsmere each month.

SECTION 14.3 TEMPORARY SIGNS

A. One temporary sign will be permitted on each lot in a non-residential zone, subject to the following standards and conditions:

1. It shall not exceed twelve (12) square feet in area;
2. It shall be attached at all four corners or otherwise firmly affixed to a wall of the principal building or it may be freestanding;
3. If it is freestanding, it shall be supported by one or more posts or similar devices in the ground and shall not exceed six (6) feet in height;
4. In no case shall such a sign be affixed to a tree or other natural feature, a fence, a utility pole, or a fixture or structure on the property other than the principal building;
5. If freestanding, it shall be set back a minimum of ten (10) feet from any property line;
6. It shall not be separately illuminated;

7. If the message relates to an event, such sign shall be removed within seven (7) days following the conclusion of the event;
8. Such a sign may bear any noncommercial message or a commercial message.

SECTION 14.4 SCOPE, AUTHORITY AND APPLICABILITY

A. SCOPE: This Article is adopted pursuant to KRS 100.

B. AUTHORITY: This Article regulates signs, as defined herein, when mounted, located, or displayed on property located within the incorporated limits of the City of Elsmere, on land that is either private land or public land over which the City of Elsmere has land use regulatory authority.

C. APPLICABILITY, GENERAL: This Article shall apply to all signs erected, placed, painted, installed or otherwise made visible on private or public property in the City of Elsmere, except as otherwise provided herein. All signs displayed in the City of Elsmere shall comply with all requirements of this Article and all other applicable law. Permits shall be required for all signs in the City of Elsmere, except as specified herein. No sign, outdoor advertising, structure, billboard or display shall be erected, installed, located or maintained in any zoning district of the City of Elsmere, except in conformity with these regulations. New signs, additional signs, relocations or structural alterations of existing signs also require sign permits.

D. COMPLIANCE REQUIRED: It shall be unlawful and a violation of this Article for any person to fasten, place, paint, or attach in any way: any sign, handbill, poster, advertisement, or notice of any kind, or cause the same to be done in or upon any curb-stone, lamp post, utility pole, hydrant, bridge, culvert, public drinking fountain, public trash container, courtesy benches, rest room, bus stop kiosk or shed, station building, tree, or in or upon any portion of any public sidewalk, street, or sign, except as specifically allowed within this Article.

E. EXEMPTIONS: The following signs or sign elements are exempt from the provisions of this Article but are subject to any other applicable laws and regulations:

1. Any sign installed in a building or enclosed space and not legible from the public right-of-way or from private or public property other than the property on which it is located;
2. Any sign with a sign area of less than four square feet in area and less than four feet in height (if freestanding), that is not separately illuminated and that is not legible from the public right-of-way or from private or public property other than the property on which it is located;

3. Signs on mass transit vehicles operating in or passing through the City of Elsmere; and
4. Signs on vehicles and watercraft which are regularly used in the operation of a business; signs on vehicles which are parked for long periods of time, which are not operational and/or which are not regularly used in the operation of a business at the same location where the vehicle is most frequently parked shall be considered detached signs and subject to regulation under this Article. For purposes of this subsection, a "long period of time" shall be a continuous period of 30 days or separate periods that total 40 days or more out of any 60-day period.

F. SIGNS SUBJECT TO OTHER STANDARDS: Signs listed in this Section shall be exempt from the permit requirements of this Article; but, shall, to the maximum extent allowed by law, be subject to the other standards of this Article. Where a sign is erected pursuant to a statute or a court order, the sign may exceed the size standards of this Article or otherwise deviate from the standards set forth in this Article to the extent that the statute or court order expressly required the larger size or other deviation. In all other respects, such signs shall conform to the standards of this Article. This subsection shall apply to the following types of signs:

1. Signs conforming to the Manual of Uniform Traffic Control Devices and bearing no commercial message;
2. Signs installed by employees or officials of the City of Elsmere, Kenton County, a state or federal agency in the course of their governmental duties;
3. Signs required by a state or federal statute;
4. Signs required by an order of a court of competent jurisdiction;
5. Signs installed by public utilities in their rights-of-way or on their facilities and bearing no commercial message other than such message is necessary to identify the use and/or provide contact information regarding the facility; and
6. Signs installed by a transit company with a franchise or other right to operate in the City of Elsmere, where such signs are installed along its routes and relate to schedules or other information about the transit route.

G. SIGNS ALLOWED WITHOUT A PERMIT: The following signs or sign-like devices are allowed in all zoning districts without a sign permit and are not to be included in determination of the allowable numbers, type and area of a sign that requires a sign permit. If a sign otherwise falling under this Section is electrified, it will require an electrical permit. Signs subject to this Section shall conform to the requirements specified:

1. Address Numbers used for the purpose of identifying the address of any building shall not be counted toward allowed sign area;

2. Detached signs smaller than four square feet in area and less than four feet in height, of which not more than 25 percent may be used for a commercial message (e.g., “Enter” or “Exit” signs);

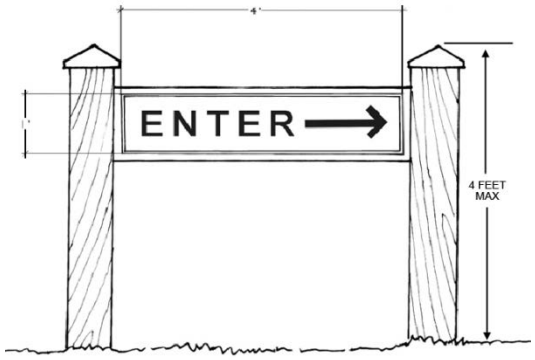

3. Detached signs smaller than seven square feet, allowed in residential, conservation, and agricultural zoning districts;
4. Temporary signs not greater than twelve (12) square feet, allowed in non-residential zones;
5. Wall signs containing no commercial message and not larger than four square feet in area;
6. Cultural decorations or displays of noncommercial nature, mounted on private residential property, which pertain to cultural observances;
7. Cornerstones, foundation stones and memorial signs or tablets when cut into any masonry surface or inlaid so as to be part of the building or when constructed of bronze or other incombustible material, provided that no such sign shall exceed six square feet in area nor shall any such sign be separately illuminated;

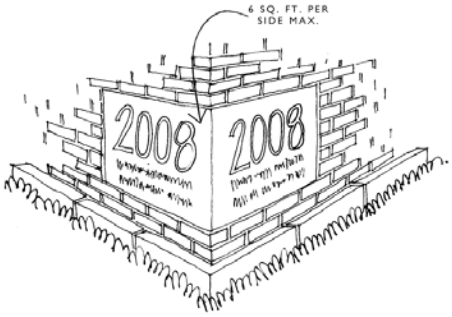

8. Symbols that do not bear or include any commercial message and that are integrated into the architecture of a building;
9. Gravestones when erected in a lawful cemetery or graveyard; and
10. Graphic images which are visible only from aircraft flying above.

H. OTHER ACTIONS ALLOWED WITHOUT A PERMIT: The following signs and actions related to signs shall be exempt from the permit requirements of this Article but shall be subject to all other standards of this Article.

1. Changing of the advertising copy or message on an existing painted or printed sign, marquee, changeable copy sign or a similar compliant sign, whether electrical, illuminated, electronic message center or non-illuminated painted message, provided that the copy on an electronic message board shall not change more frequently than allowed under Section 14.6, D.;
2. Painting, repainting, cleaning or other normal maintenance and repair of a sign not involving structural alterations;

3. Installation of permanent signs smaller than four square feet where such signs are allowed by this Article, contain no commercial message and involve no electrical installation; and
4. Installation of temporary signs not larger than four square feet, where such signs are allowed by this Article and conform with this Article in all respects.

I. PRODUCT DISPLAYS, SALES DEVICES, MENU BOARDS

1. Nothing in this Article shall prohibit or limit the outdoor display of products where allowed under the zoning ordinance, although a particular product may be a thing which would be prohibited by this Article if used as a sign and although one or more such products may have on them permanent labels that might otherwise fall under this Article. This Article shall, however, apply to any sign, banner, pennant, or other attention-attracting device affixed to a product displayed outdoors. For example, the label "Chevrolet" on an automobile or "John Deere" on a tractor shall not be considered a sign for purposes of this Article, but a separate sign attached to such a product shall be considered a sign and subject to regulation.
2. Signs on gasoline pumps, vending machines, news racks and similar machines and devices used for the sale or dispensing of products shall be allowed without a sign permit if they do not flash and if they are either not legible from any public right-of-way, public property or private property other than the site on which the sign is located; or they consist entirely of letters, numerals or symbols that are less than four inches in height. All other signs on vending machines, gas pumps, news racks and similar machines and devices shall be considered "signs" and shall be subject to all of the regulations of this Article.
3. In districts where drive-through and drive-up facilities are allowed, menu boards or other instructional or informational devices related to the drive-through or drive-up facilities shall be allowed without a sign permit, provided that such device is less than 12 square feet in size, and that the only words, numerals, symbols or pictures on such device that are legible from any location other than the site on which it is located shall include no commercial message but shall simply identify the device as a "menu," "directory," "instructions," "information" or something similar, or a logo that is no larger than one foot in any dimension. In such districts, directional information and logos installed on drive-through canopies are also permitted and are not considered signs.

SECTION 14.5 PROHIBITED SIGN TYPES

A. Unless specifically authorized by another section of this Article, or by other law, the following sign types are prohibited at all times and in all zones.

1. New billboards;
2. Any freestanding sign of which the area exceeds ten percent of the area of the site or parcel on which it is located; or two percent of the lawful, as-built floor area of the principal building on the site; note that this is intended as a circuit-breaker and that all signs are subject to other size and dimensional requirements in this ordinance
3. Portable signs, including folding portable signs and flashing portable signs;
4. Pennants, banners, streamers, balloons, and similar devices;
5. Animated, projecting, revolving, and moving signs, including those which create the appearance of animation, projection, revolving or other movement, or utilize flashing or intermittent lights, or lights of changing degrees of intensity; automatic changeable copy signs that conform with section 14.6, D. are not subject to this limitation;

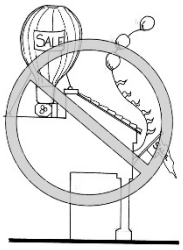

6. Signs which are not traffic, control or safety signals, but by their shape, color, or manner of mounting or display, appear to be traffic, control or safety signals, and thus create confusion for drivers and pedestrians, as well as signs which create or constitute traffic hazards;
7. Signs on vacant lots in non-residential zones larger than 12 square feet in area;

8. Signs for which a separate structure is mounted on a roof or parapet; this provision does not prevent signs which are integral to the building; and
9. Signs using sounds, music, sound effects, noises, or other sound or noise-making or transmitting device or instruments.

SECTION 14.6 INSTALLATION, DESIGN AND CONSTRUCTION STANDARDS

A. LOCATION

1. No sign shall be located closer than five feet to any property line.
2. No sign shall be located so that it obstructs access to or from a doorway, fire escape or required escape window.
3. No sign shall be located so that it blocks the free air flow through windows in residential units.
4. No sign located within a clear sight triangle shall obstruct the vision of motorists or pedestrians between a height of 30 inches and 108 inches off the ground.
5. No wall sign shall extend above the top of the wall of the building, including parapets and architectural extensions.

6. No sign shall be located within eight vertical feet or four horizontal feet of overhead electrical or other wires.

B. NO PROJECTIONS OVER STREETS OR ALLEYS: Projecting signs are allowed in some zoning districts. No sign shall project over a public right-of-way unless the sign owner has obtained an encroachment permit for such sign. No sign shall project over any portion of a right-of-way used as a street, alley or other way for vehicular travel; encroachment permits are limited to allowing projecting signs to extend over sidewalks.

C. SIGN MAINTENANCE

1. The property owner shall be liable to maintain such sign, including its illumination sources, in neat and orderly condition and good working order at all times and to prevent the development of any deterioration in the safety of such sign. The property owner may assign such responsibility to a tenant or other party, but the property owner shall remain accountable for the maintenance.
2. Nothing in this Article shall prohibit the routine maintenance of any nonconforming sign or the changing of the copy or content of any nonconforming sign, except where such maintenance or change in copy would increase the degree of its nonconformity.

D. FLASHING SIGNS, MOVING SIGNS, AND CHANGEABLE COPY SIGNS

1. General Rule: Signs that move, flash or simulate movement are prohibited except as allowed under this section. A changeable copy sign is considered a different classification of sign under this Article; conversion of an existing sign to a changeable copy sign or to add changeable copy elements to it is allowed only if the modified sign will conform with all standards in this Section and with all other applicable standards related to the location, height, size and other characteristics of the sign.
2. Rules for Changeable Copy Signs Allowed under this Article: Automatic changeable copy signs shall be allowed only in those districts in which “changeable copy sign, automatic” is listed as a permitted sign type and shall be subject to the following additional restrictions:

    a. Such technology shall be programmed so that the message or image on the sign changes no more often than every eight seconds.
    b. There shall be no effects of movement, flashing, scintillation, or similar effects in the individual images.
    c. Changes of image shall be substantially instantaneous as seen by the human eye and shall not use fading, rolling, window shading, dissolving or similar effects as part of the change.

d. Video technology in signs shall use automatic level controls to reduce light levels at night and under cloudy or other darkened conditions, in accordance with the following standards.

(1) All electronic or digital display unit message boards shall have installed ambient light monitors, and shall at all times allow such monitors to automatically adjust the brightness level of the electronic board based on ambient light conditions.

(2) Maximum brightness levels for electronic or digital display boards shall not exceed 5,000 nits when measured from the billboard's face at its maximum brightness, during daylight hours and 500 nits when measured from the board face at its maximum brightness between dusk and dawn, i.e., the time of day between sunrise and sunset.

e. Any sign using electronic or electro-mechanical technology for changeable copy message boards, which malfunctions, fails, or ceases to operate in its usual or normal programmed manner causing therein motion, movement, flashing or any other similar effects, shall be repaired or disconnected within 48 hours by the owner or operator of such billboard.

f. The area of a sign consisting of electronic or electro-mechanical message board elements shall not constitute more than 200 square feet of a sign.

g. The following limitations shall apply to the location of signs using electronic or electro-mechanical technology for a message board:

(1) A sign on which the electronic or electro-mechanical message board includes 100 or more square feet of sign area shall not be erected within 500 feet of property falling in one of the City of Elsmere or other jurisdiction's residential zoning districts, although this restriction shall not apply to mixed use districts and commercial districts allowing residential uses.

(2) A sign on which the electronic or electro-mechanical message board includes 20 or more square feet of sign area but less than 100 square feet of sign area shall not be erected within 200 feet of property falling in one of the City of Elsmere or other jurisdiction's residential zoning districts, although this restriction shall not apply to mixed use districts and commercial districts allowing residential use.

(3) A sign on which the electronic or electro-mechanical message board includes less than 20 square feet of sign area shall not be erected within 100 feet of property zoned

and used exclusively for single family uses; it is the express intent of this provision to allow the use of such technology on signs for institutional uses located in residential districts, provided that the required separation is maintained between the sign and any property zoned and exclusively used for a single-family use.

SECTION 14.7 SIGNS ALLOWED IN CONSERVATION, AGRICULTURAL AND RURAL DISTRICTS (CO Zone)

A. WALL SIGNS

1. One wall sign, not exceeding one (1) square foot in area, is allowed for each dwelling unit. Such sign may contain a noncommercial message or a commercial message related to an activity lawfully conducted on the premises, including a lawful home occupation. The sign shall not be illuminated.
2. For permitted uses other than single-family residences, one wall sign per use, not more than two (2) square feet in area is allowed, provided that such sign contains no commercial message and is not illuminated.

B DETACHED SIGNS

1. Each lot shall be allowed a total of four detached signs, including not more than one permanent detached sign, and temporary detached signs (up to a total of four detached signs at any time), each not exceeding six (6) square feet in area and not exceeding six (6) feet in height. Such signs shall not be illuminated. The only commercial messages allowed on such signs are messages related to commercial activity lawfully conducted on the premises, including the sale of agricultural products, the lawful, occasional sale of personal property (such as through a garage sale or yard sale) or the sale, rental or lease of the premises.
2. Signs related to the sale of personal property (not including agricultural products) shall be removed within twenty-four hours after the end of the sale. Signs related to the sale, lease or rental of the premises shall be removed no later than the date on which the deed, lease or other document representing the transaction is completed. Any such sign may contain any message other than a commercial message. If a message relates to an election or special event, such sign shall be removed within seven (7) days following the conclusion of such election or other event.

C. TEMPORARY SUBDIVISION SIGNS

1. As a temporary use accessory to the permitted activity of lawful subdivision development, one temporary sign at each principal entrance to

a subdivision is allowed. There shall in no case be more than one such sign for each fifty (50) lots in a proposed subdivision. Such sign shall not be illuminated and shall not exceed thirty-two (32) square feet in area. Such sign shall be removed upon the earlier of the following:

a. Installation of a permanent neighborhood identification sign;
b. Sale of more than ninety percent (90%) of the lots in the subdivision; or
c. A period of two (2) years from the date of installation.

D. PERMANENT ENTRANCE SIGNS

1. Permanent neighborhood, multi-family or mobile home park monument signs, either illuminated or non-illuminated, are allowed. Such signs may include a masonry wall, landscaping or other similar materials or features. Such signs shall only be located at the principal entrance(s) to the neighborhood from a street classified on the comprehensive plan as an arterial or collector street. There shall be a maximum total sign area of fifty (50) square feet which may be used in a single sign or may be divided between a maximum of two (2) signs located on opposite sides of the same entrance. Such sign(s) shall not exceed six (6) feet in height.

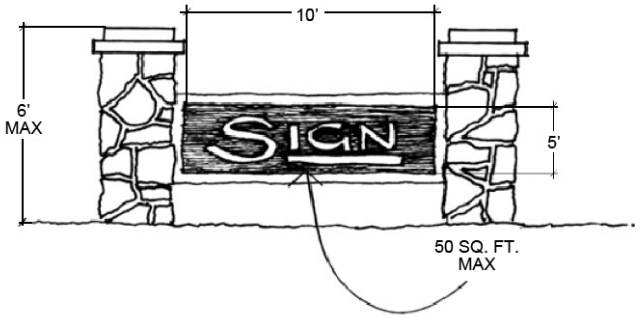

E. INSTITUTIONAL SIGNS

1. Any school, house of worship, recreation center or other institutional use permitted in the zoning district may have one detached sign, not to exceed forty (40) square feet in area. This may include changeable copy signs, not to

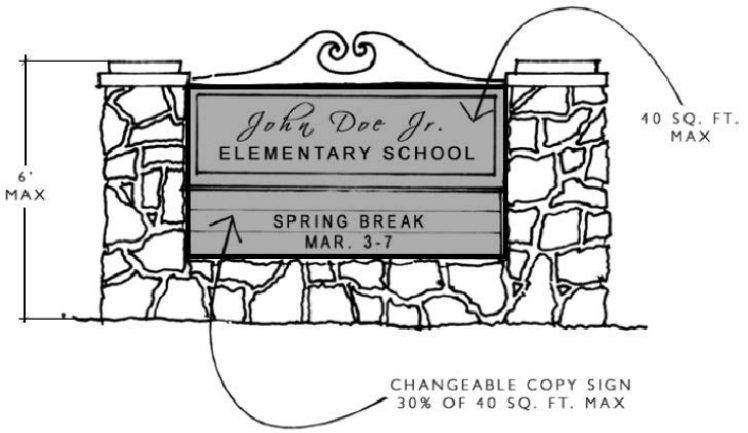

exceed thirty percent (30%) of the sign area. Such signs may be illuminated.

2. Each such use shall also be allowed one wall sign for each public entrance to a building; such wall signs shall not exceed four (4) square feet each and shall not be illuminated.
3. A permanent wall sign is allowed for institutional uses in these districts, subject to the following limits. No sign shall extend above the top of the wall of the building, including parapets and architectural extensions.

	Wall
Maximum size	Two (2) square feet of sign area per lineal foot of building width on the side of building on which sign is located, with a maximum size of 150 square feet
Maximum number	One per building street frontage
Permitted illumination	Concealed source only
Changeable copy	Not allowed
Maximum Letter Size	Thirty-six (36) inches

F. OTHER SIGNS

1. Signs allowed under Section 14.4, F., Signs Subject to Other Standards, and Section 14.4, G., Signs Allowed Without a Permit.

SECTION 14.8 SIGNS ALLOWED IN SINGLE-FAMILY AND TWO-FAMILY RESIDENTIAL DISTRICTS (R-1B, R-1E, R-1F, R-1FF, and R-1GG Zones)

A. WALL SIGNS

1. One wall sign, not exceeding one (1) square foot in area, is allowed for each dwelling unit. Such sign may contain a noncommercial message or a commercial message related to an activity lawfully conducted on the premises, including a lawful home occupation. The sign shall not be separately illuminated.
2. For permitted uses other than single-family residences, one wall sign per use not more than two (2) square feet in area is allowed, provided that such sign contains no commercial message and is not illuminated.

B DETACHED SIGNS

1. Each lot in a residential district shall be allowed a total of four detached signs, including not more than one permanent detached sign, and temporary detached signs (up to a total of four detached signs at any time), each not exceeding six (6) square feet in area and not exceeding six (6) feet in height. Such signs shall not be illuminated. The permanent sign shall not contain a commercial message, and no more than two (2) signs on a lot in a residential district at any one time, including all wall signs, detached signs, temporary signs, and others, may contain commercial messages. The only commercial messages allowed on such signs are messages related to commercial activity lawfully conducted on the premises, including the lawful, occasional sale of personal property (such as through a garage sale or yard sale) or the sale, rental or lease of the premises.
2. Signs related to the sale of personal property shall be removed within twenty-four hours after the end of the sale. Signs related to the sale, lease or rental of the premises shall be removed no later than the date on which the deed, lease or other document representing the transaction is completed. Any such sign may contain any message other than a commercial message. If a message relates to an election or special event, such sign shall be removed within seven (7) days following the conclusion of such election or other event.

C. TEMPORARY SUBDIVISION SIGNS

1. As a temporary use accessory to the permitted activity of lawful subdivision development, one temporary sign at each principal entrance to a subdivision is allowed. There shall in no case be more than one such sign for each fifty (50) lots in a proposed subdivision. Such sign shall not be illuminated and shall not exceed thirty-two (32) square feet in area. Such sign shall be removed upon the earlier of the following:

    a. Installation of a permanent neighborhood identification sign;
    b. Sale of more than ninety percent (90%) of the lots in the subdivision; or
    c. A period of two (2) years from the date of installation.

D. PERMANENT ENTRANCE SIGNS

1. Permanent neighborhood, multi-family or mobile home park monument signs, either illuminated or non-illuminated, are allowed. Such signs may include a masonry wall, landscaping or other similar materials or features. Such signs shall only be located at the principal entrance(s) to the neighborhood from a street classified on the comprehensive plan as an arterial or collector street. There shall be a maximum total sign area of fifty (50) square feet which may be used in a single sign or may be divided

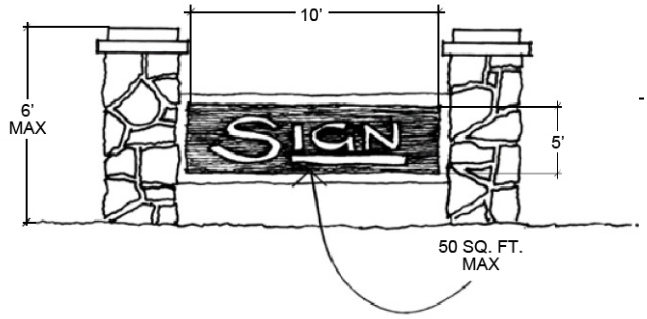

between a maximum of two (2) signs located on opposite sides of the same entrance. Such sign(s) shall not exceed six (6) feet in height.

E. INSTITUTIONAL SIGNS

1. Any school, house of worship, recreation center or other institutional use permitted in the zoning district may have one detached sign, not to exceed forty (40) square feet in area. This may include changeable copy signs, not to exceed thirty percent (30%) of the sign area. Such signs may be illuminated.

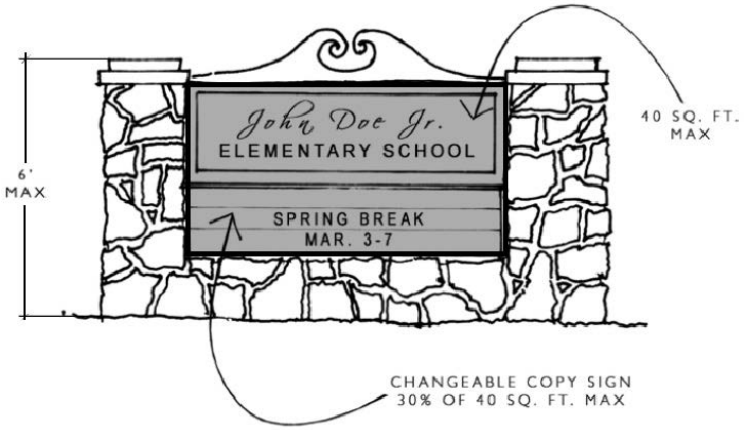

2. Each such use shall also be allowed one wall sign for each public entrance to a building; such wall signs shall not exceed four (4) square feet each and shall not be illuminated.
3. A permanent wall sign is allowed for institutional uses in these districts, subject to the following limits. No sign shall extend above the top of the wall of the building, including parapets and architectural extensions.

	Wall
Maximum size	Two (2) square feet of sign area per lineal foot of building width on the side of building on which sign is located, with a maximum size of 150 square feet
Maximum number	One per building street frontage
Permitted illumination	Concealed source only
Changeable copy	Not allowed
Maximum Letter Size	Thirty-six (36) inches

F. OTHER SIGNS

1. Signs allowed under Section 14.4, F., Signs Subject to Other Standards, and Section 14.4, G., Signs Allowed Without a Permit.

SECTION 14.9 SIGNS ALLOWED IN MULTI-FAMILY RESIDENTIAL DISTRICTS (R-2 and R-3 Zones)

A. WALL SIGNS

1. One wall sign, not exceeding one (1) square foot in area, is allowed for each dwelling unit. Such sign may contain a noncommercial message or a commercial message related to an activity lawfully conducted on the premises, including a lawful home occupation. The sign shall not be separately illuminated.
2. For permitted uses other than single-family residences, one wall sign per use not more than two (2) square feet in area is allowed, provided that such sign contains no commercial message and is not illuminated.
3. For any building containing three or more dwelling units sharing a common entrance or hallway, one additional wall sign shall be allowed at each public entrance. Such sign shall bear no commercial message. The sign shall not be legible from the public right-of-way. The sign shall not be separately illuminated. The sign shall not be more than four square feet in area. The purpose of this section is to allow for directory signs, listing tenants or occupants, but the sign may bear any message other than a commercial message.

B DETACHED SIGNS

1. Permanent detached signs are allowed in these zoning districts subject to the following limitations. The principal detached sign may contain a commercial message related to the rental, lease or occupancy of the premises. No other commercial message is allowed on the permanent signs allowed under this table.

	Principal	**Directory**	**Additional**
Maximum number	One per street frontage per site	One per vehicle entrance	One per public entrance per building
Maximum size	25 square feet	Six square feet	Six square feet
Maximum height	6 feet	4 feet	4 feet
Minimum setback from nearest property line	5 feet from front property line; 10 feet from any other property line	15 feet	25 feet
Permitted illumination	External or internal, direct or concealed source	Concealed source only	Concealed source only

	Principal	**Directory**	**Additional**
Changeable copy	Not allowed	Not allowed	Not allowed

2. In addition to these permanent detached signs, each separately owned or controlled lot in such a residential district shall be allowed a total of four detached signs, including not more than one permanent detached sign, and temporary detached signs (up to a total of four detached signs at any time), each not exceeding six (6) square feet in area and not exceeding six (6) feet in height. Such signs shall not be illuminated. The permanent sign shall not contain a commercial message, and no more than two (2) signs on a lot in a residential district at any one time, including all wall signs, detached signs, temporary signs, and others, may contain commercial messages. The only commercial messages allowed on such signs are messages related to commercial activity lawfully conducted on the premises, including the lawful, occasional sale of personal property (such as through a garage sale or yard sale) or the sale, rental or lease of the premises.
3. Signs related to the sale of personal property shall be removed within twenty-four hours after the end of the sale. Signs related to the sale, lease or rental of the premises shall be removed no later than the date on which the deed, lease or other document representing the transaction is completed. Any such sign may contain any message other than a commercial message. If a message relates to an election or special event, such sign shall be removed within seven (7) days following the conclusion of such election or other event.

C. TEMPORARY SUBDIVISION SIGNS

1. As a temporary use accessory to the permitted activity of lawful subdivision development, one temporary sign at each principal entrance to a subdivision is allowed. There shall in no case be more than one such sign for each fifty (50) dwelling units in a proposed development. Such sign shall not be illuminated and shall not exceed thirty-two (32) square feet in area. Such sign shall be removed upon the earlier of the following:

   a. Installation of a permanent neighborhood identification sign;
   b. Sale of more than ninety percent (90%) of the lots in the subdivision; or
   c. A period of two (2) years from the date of installation.

D. PERMANENT ENTRANCE SIGNS

1. Permanent neighborhood, multi-family or mobile home park monument signs, either illuminated or non-illuminated, are allowed. Such signs may include a masonry wall, landscaping or other similar materials or features.

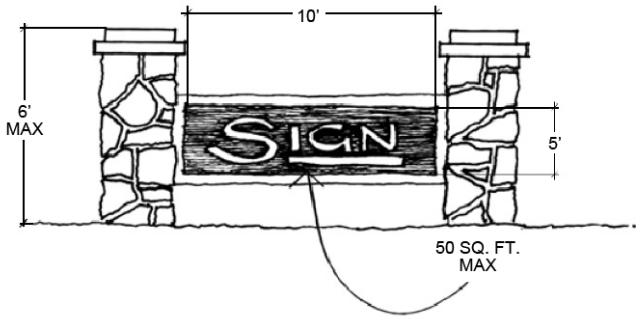

Such signs shall only be located at the principal entrance(s) to the neighborhood from a street classified on the comprehensive plan as an arterial or collector street. There shall be a maximum total sign area of fifty (50) square feet which may be used in a single sign or may be divided between a maximum of two (2) signs located on opposite sides of the same entrance. Such sign(s) shall not exceed six (6) feet in height.

E. INSTITUTIONAL SIGNS

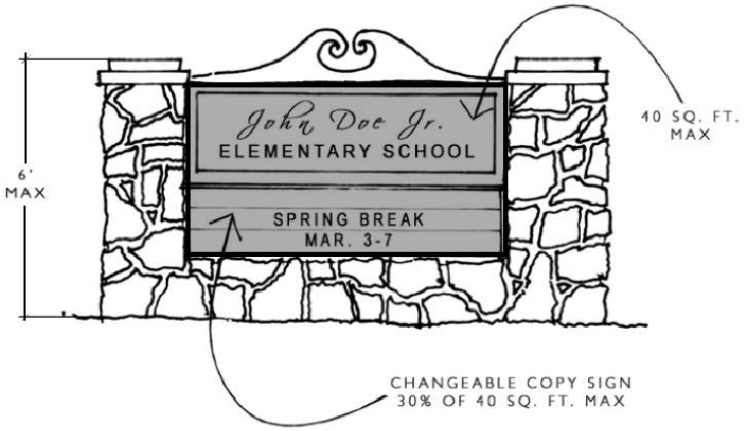

1. Any school, house of worship, recreation center or other institutional use permitted in the zoning district may have one detached sign, not to exceed forty (40) square feet in area. This may include changeable copy signs, not to exceed thirty percent (30%) of the sign area. Such signs may be illuminated.
2. Each such use shall also be allowed one wall sign for each public entrance to a building; such wall signs shall not exceed four (4) square feet each and shall not be illuminated.
3. A permanent wall sign is allowed for institutional uses in these districts, subject to the following limits. No sign shall extend above the top of the wall of the building, including parapets and architectural extensions.

	Wall
Maximum size	Two (2) square feet of sign area per lineal foot of building width on the side of building on which sign is located, with a maximum size of 150 square feet
Maximum number	One per building street frontage
Permitted illumination	Concealed source only

Changeable copy	Not allowed
Maximum Letter Size	Thirty-six (36) inches

F. OTHER SIGNS

1. Signs allowed under Section 14.4, F., Signs Subject to Other Standards, and Section 14.4, G., Signs Allowed Without a Permit.

SECTION 14.10 SIGNS ALLOWED IN GENERAL BUSINESS AND COMMERCIAL DISTRICTS

A. WINDOW AND WALL SIGNS

1. NC Zoning Districts

a. Window and permanent wall signs are allowed for nonresidential uses in these districts, subject to the following limits. No wall sign shall extend above the top of the wall of the building, including parapets and architectural extensions.

	Window	**Wall**	**Total**
Maximum size	25 percent of window area on that building wall	See total	Two (2) square feet of sign area per lineal foot of building width on the side of building on which sign is located
Maximum number	Area limit only	One per building street frontage	N/A
Permitted illumination	No separate illumination	Illumination from a concealed source only	N/A
Changeable copy	Not allowed	Not allowed	N/A

B. POLE OR GROUND SIGNS

1. NC Zoning Districts

a. Pole or principal ground signs are allowed in these zoning districts subject to the following limitations.

	Principal	**Other**
Maximum number	One per street frontage	One per vehicle entrance in NSC district; not allowed in NC district
Maximum size	25 square feet	Six square feet

	Principal	**Other**
Maximum height	20 feet	4 feet
Minimum setback from nearest right-of-way	5 feet	25 feet
Minimum setback, other	Five feet from any other property line; 50 feet from nearest single-family residential district	Five feet from any other property line; 15 feet from nearest single-family residential district
Permitted illumination	Concealed source only	Concealed source only
Changeable copy	Not allowed	Not allowed

C. WALL SIGNS NOT LEGIBLE FROM THE RIGHT-OF-WAY

1. For any building containing three or more uses of any type sharing a common entrance or hallway, one additional wall sign shall be allowed at each public entrance providing access to such uses. Such sign shall bear no commercial message related to activities, goods or services not offered on the premises. The sign shall not be legible from the public right-of-way. The sign shall not be separately illuminated. The sign shall not be more than four square feet in area. The purpose of this section is to allow for directory signs, listing tenants or occupants, but the sign may bear any message other than a commercial message not related to commercial activities on the premises.

D. INSTITUTIONAL SIGNS

1. Any school, house of worship, recreation center or other institutional use permitted in the zoning district may have one detached sign, not to exceed forty (40) square feet in area. This may include changeable copy signs, not to exceed thirty percent (30%) of the sign area. Such signs may be illuminated.

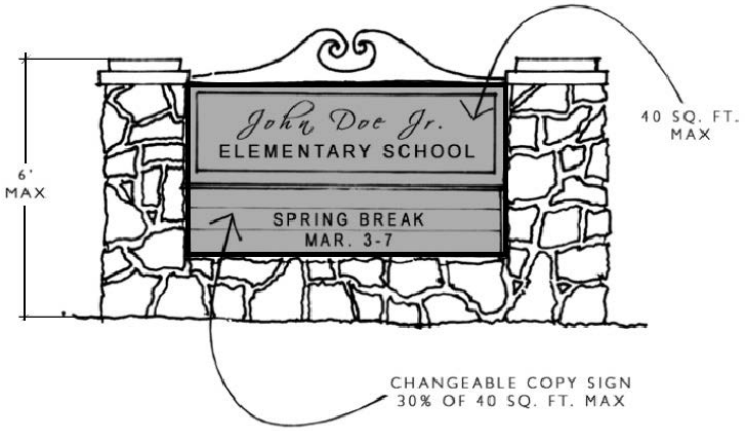

2. Each such use shall also be allowed one wall sign for each public entrance to a building; such wall signs shall not exceed four (4) square feet each and shall not be illuminated.
3. A permanent wall sign is allowed for institutional uses in these districts, subject to the following limits. No sign shall extend above the top of the wall of the building, including parapets and architectural extensions.

	Wall
Maximum size	Two (2) square feet of sign area per lineal foot of building width on the side of building on which sign is located, with a maximum size of 150 square feet
Maximum number	One per building street frontage
Permitted illumination	Concealed source only
Changeable copy	Not allowed
Maximum Letter Size	Thirty-six (36) inches

E. OTHER SIGNS

1. Signs allowed under Section 14.4, F., Signs Subject to Other Standards, and Section 14.4, G., Signs Allowed Without a Permit.

SECTION 14.11 SIGNS ALLOWED IN INDUSTRIAL DISTRICTS (IP-1, IP-2, and IP-3 Zones)

A. WALL SIGNS

1. Permanent wall signs are allowed for nonresidential uses in these districts, subject to the following limits. No wall sign shall extend above the top of the wall of the building, including parapets and architectural extensions.

	Window	**Wall**	**Total**
Maximum size	Not allowed	Two (2) square feet of sign area per lineal foot of building width on the side of building on which sign is located	Two (2) square feet of sign area per lineal foot of building width on the side of building on which sign is located
Maximum number	Not allowed	One per street frontage	N/A
Permitted illumination	Not allowed	Illumination from a concealed source only	N/A
Changeable copy	Not allowed	Not allowed	N/A

B. POLE OR PRINCIPAL GROUND SIGNS

1. Pole or principal ground signs are allowed in these zoning districts subject to the following limitations.

	Principal	**Directory**
Maximum number	One per street frontage	One per vehicle entrance and one per public entrance per building
Maximum size	IP-1, IP-2, and IP-3: 40 square feet	Six square feet
Maximum height	IP-1, IP-2, and IP-3: 10 feet	Six feet
Minimum setback from nearest right-of-way	15 feet	15 feet
Minimum setback, other	20 feet from any other property line; 100 feet from nearest single-family residential district	20 feet from any other property line; 50 feet from nearest single-family residential district
Permitted illumination	Concealed source only	Concealed source only
Changeable copy	Automatic allowed; may cover up to 25 percent of sign face allowed	Not allowed

C. DETACHED SIGNS NOT LEGIBLE FROM THE RIGHT-OF-WAY

1. To improve wayfinding on multi-user sites, the following detached signs are allowed in addition to those allowed under subsection B of this Section. One detached sign not legible from the right-of-way, not exceeding twenty (20) square feet in area and not exceeding six feet in height shall be allowed for each four separate nonresidential uses or per

vehicle entrance, whichever is less. One additional such sign shall be allowed for each two drive-through lanes. Such sign shall be set back from the public right-of-way a minimum of fifty (50) feet, from any other property line a minimum of thirty (30) feet, and from a residential zoning district a minimum of fifty (50) feet. Such sign shall not contain changeable copy and the sign may be internally illuminated or externally illuminated from an exposed or concealed source.

D. INSTITUTIONAL SIGNS

1. Any school, house of worship, recreation center or other institutional use permitted in the zoning district may have one detached sign, not to exceed forty (40) square feet in area. This may include changeable copy signs, not to exceed thirty percent (30%) of the sign area. Such signs may be illuminated.

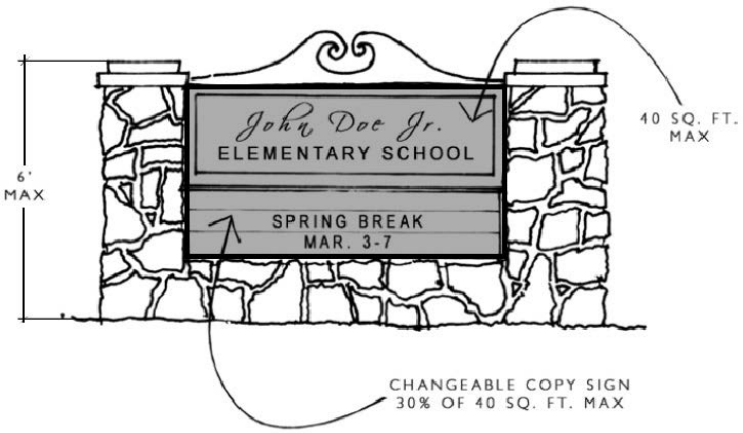

2. Each such use shall also be allowed one wall sign for each public entrance to a building; such wall signs shall not exceed four (4) square feet each and shall not be illuminated.
3. A permanent wall sign is allowed for institutional uses in these districts, subject to the following limits. No sign shall extend above the top of the wall of the building, including parapets and architectural extensions.

	Wall
Maximum size	Two (2) square feet of sign area per lineal foot of building width on the side of building on which sign is located, with a maximum size of 150 square feet
Maximum number	One per building street frontage
Permitted illumination	Concealed source only
Changeable copy	Not allowed
Maximum Letter Size	Thirty-six (36) inches

E. OTHER SIGNS

1. Signs allowed under Section 14.4, F., Signs Subject to Other Standards, and Section 14.4, G., Signs Allowed Without a Permit.

SECTION 14.12 MASTER SIGNAGE PLANS

A. PURPOSE AND INTENT

1. It is the purpose of the City of Elsmere to require owners, lessees and managers of sites containing multiple signs requiring permits to plan and design signs that are compatible with the buildings on the site, thus enhancing the appearance of the site and of the streetscape that includes it. This Section spells out specific criteria for review for compliance with the section, but the City of Elsmere recognizes that the consideration of issues of design necessarily requires some exercise of judgment, within the specific criteria set out in this Section. Although the City of Elsmere has provided a remedy of appeal for an applicant aggrieved by an action on a proposed master signage plan, it is the intent of the City of Elsmere that the primary remedy for such an applicant is the erection and installation of all of the signs allowed by right, under other sections of this Article. It is thus the intent of the City of Elsmere, that, to the extent that it can guide the scope of review of a court considering an appeal, a court considering an appeal under this Section reverse or remand the decision of the Zoning Administrator only if it finds that such action is arbitrary and capricious.

B. APPLICABILITY

1. The owner of any site that includes more than one tenant or occupant shall apply for approval of a Master Signage Plan before applying for a sign permit for any detached sign.

C. PROCEDURE

1. The submittal of a Master Signage Plan shall be considered a Stage II Development Plan.
2. The owner(s) shall apply to the planning commission's duly authorized representative.
3. Where an application for approval of a Master Signage Plan is submitted simultaneously or as part of another Stage II Development Plan, the two shall be processed together. Where an application includes properties not under common ownership, all property owners shall sign the application or

shall submit documents granting the applicant the authority to process such an application.

4. The planning commission's duly authorized representative shall review the submitted Stage II Development Plan with regard to its compliance with the required elements of this Section, for Master Signage Plans, other applicable elements of this Article, and other applicable regulations, and its conformity with any approved Stage I Development Plan for the property. In approving the Master Signage Plan, the planning commission's duly authorized representative may authorize minor adjustments from the Stage I Development Plan.
5. If a Master Signage Plan application is denied, the applicant may submit a new application with a revised plan at any time.
6. Any person aggrieved by the action of the planning commission's duly authorized representative on a Master Signage Plan may appeal the decision by filing an application with the Planning Commission.

D. APPLICATION CONTENTS

1. The application for approval of a Master Signage Plan shall contain at least the following information. Where the application is submitted simultaneously with an application for a Stage II Development Plan approval, the Master Signage Plan may refer to portions of the Stage II Development Plan application or approved Stage I Development Plan for related requirements:

    a. If the site has not been improved, all information required by Section 9.20, B. for a Stage II Development Plan;
    b. If the site has been improved, as-built conditions, showing all buildings and other improvements and all parking areas and vehicle entrances;
    c. A proposed design plan showing signage design at a scale of ½" = 1 ft.
    d. Computation of the maximum area for all signs, the height of signs and the number of detached signs allowed on the development site(s) included in the plan under this Article, including incentives authorized below;
    e. For properties with multiple tenants or multiple occupants entitled to signs, an allocation of the allowed signage among the eligible tenants or users;
    f. An accurate indication on the plot plan of the current or proposed location of each present and future sign of any type, whether requiring a permit or not, except that signs not requiring permits need not be shown;
    g. The color schemes and design features (excluding specific messages) for proposed signs; and

h. The signatures of all owners or their authorized agents in such form as the legislative body may require.

E. AMENDMENTS

1. A Master Signage Plan may be amended by filing a new Master Signage Plan that conforms to all requirements of this Section in effect at the time of submittal.

F. PROVISIONS FOR NONCONFORMING SIGNS

1. A Master Signage Plan for a property already containing signs on the date of submission of the application shall include a schedule for bringing all signs on the development site into conformance with the Master Signage Plan by a specified date. The conformance schedule included in such Master Signage Plan shall be considered a condition of approval of the Master Signage Plan.

G. CRITERIA FOR APPROVAL

1. A Master Signage Plan shall be approved if and only if the planning commission's duly authorized representative finds that the proposed plan meets all of the standards set out in this Article. If the planning commission's duly authorized representative finds that the proposed plan substantially meets such standards, it may approve the proposed plan subject to conditions that will cause it to meet these standards. Otherwise, the planning commission's duly authorized representative shall deny the application for plan approval:

   a. Each proposed sign conforms with all applicable standards of this Article;
   b. The total amount of signage proposed for any building, wall, site, or portion of a site, conforms with all applicable standards of this Article;
   c. The proposed plan contains all of the information required by subsection D of this Section
   d. The proposed allocation of allowed signage among eligible tenants, which shall be proportional to one of or a combination of the following criteria:

      (1) The number of public entrances to space leased to or controlled by each tenant or occupant;
      (2) The linear feet of frontage of the space leased to or controlled by each tenant or occupant along the wall(s) containing public entrances; and/or

(3) The façade area of the building elevation(s) containing the public entrances to the spaces leased to or controlled by each tenant or occupant.

e. All proposed signs shall be part of a common design scheme, meeting at least the following criteria:

(1) The materials and design of all wall signs shall follow one design scheme;
(2) The materials and design of freestanding signs bearing commercial messages shall follow one design scheme, which may or may not be the same as the design scheme for wall signs;
(3) Each design scheme shall require consistency among signs for at least three of the following criteria: lighting design; color schemes; materials; shape; proportion; and/or type faces;
(4) If the design schemes for the wall signs and freestanding signs are different, they shall have in common at least two of the following criteria: lighting design; color schemes; materials; proportion; and
(5) The design scheme for freestanding signs shall use building materials, colors and, where applicable, architectural design features consistent with the materials, colors and architectural design features of the principal building on the site.

H. EFFECT

1. After approval of a Master Signage Plan, no permit shall be issued for a sign on the site(s) subject to the Master Signage Plan except in accordance with such plan, and no sign shall be erected, placed, painted, or maintained, except in accordance with such plan, and such plan may be enforced in the same way as any provision of this Article. In case of any conflict between a provision of a Master Signage Plan and one or more provisions of this Article, this Article shall prevail.

I. SPECIAL SEVERABILITY PROVISIONS

1. The severability provisions of Section 14.16. A., 11., are limited by this subsection. If any procedural aspect of this Section is found by a court of competent jurisdiction to be unconstitutional, it is the intent of the City of Elsmere that this entire Section, but only this Section, should be stricken as unconstitutional, but that any plans previously approved under it should remain in effect, allowing the signs shown on such plans as lawful

nonconforming signs, regardless of whether such signs have been erected on the date of such decision. If any substantive part of the standards and criteria for approval of this Section is found by a court of competent jurisdiction to be unconstitutional it is the intent of the City of Elsmere that such part be stricken and that the rest of this Section remain in full force and effect, in accordance with the principles set out in more detail in Section 14.16, A., 11.

SECTION 14.13 PERMIT REQUIREMENTS AND PROCEDURES

A. Unless a particular sign is exempt from the permit requirement under an explicit provision of this Article or other applicable law, then a permit for such sign is required.

1. WHEN REQUIRED

a. Replacements

(1) If any sign is removed and any new sign is erected in its place, a permit shall be obtained the same as if a new sign were erected at a new location, subject to all requirements enumerated herein.

b. Maintenance

(1) If any sign is removed for maintenance and replaced on the same supports, a new permit will not be deemed necessary if the size or type of sign is not changed.

c. Relocation of Signs

(1) If any sign is removed from one location and erected at a new location, a new permit shall be obtained.

d. Alteration

(1) Alteration or enlargement of any sign shall require a permit the same as for a new sign. Any change in technology for a sign shall be considered an alteration; this shall expressly apply but not be limited to the conversion of a sign to changeable copy technology of any type.

2. APPLICATION

a. No permit shall be granted until and after an application has been filed with the designated administrative official, showing the plans and specifications, including application fees, dimensions, materials, and details of construction of the proposed structure and meeting all provisions of this Article.

3. APPLICATION FORM

a. The Zoning Administrator shall prepare and provide a form to be used as an application for a sign permit. The same form may constitute a permit, when duly approved. Multiple signs may be listed on a single permit only when they are all on the same lot or parcel, or are part of a single, comprehensive development.

4. INFORMATION ON APPLICATION

a. The sign application form shall include the following information:

(1) Name and contact information for the applicant, and if separate, the name, address and consent of the property owner;
(2) Street address and Property Identification Number (PIDN) of the site;
(3) Accurate site plan to scale describing the design, dimensions, proposed placement, structural and electrical characteristics and appearance of the sign(s), including the location of existing buildings, signs and other structures on the same site as the proposed sign(s);
(4) If the plans and drawings require an engineer's or architect's seal, signature or certificate, such shall show current Kentucky registration or licensure;
(5) Any signs or other structures to be removed or relocated;
(6) Dimensions and heights of all existing and proposed sign(s);
(7) Information regarding electrification, trenching, demolition, plumbing, temporary street closure, or encroachment into the public right of way;
(8) Any known uncorrected violations of zoning laws on the site;
(9) Name, address and any licensing/bonding information for any sign contractors;
(10) Technical drawings, specifications, structural safety calculations for the sign structure;
(11) The graphic design or proposed message of the sign is optional with the applicant;
(12) If the sign is subject to any of the safety codes (building, electrical, etc.), then all information required to determine

compliance with such codes or to satisfy the requirements of such codes;

(13) The length of each occupant's/tenant/s lineal wall frontage;

(14) Workers' compensation and liability documents and occupational licenses for all contractor's.

5. INITIAL REVIEW

a. Unless a given sign is exempt from the permit requirement, all sign permit applications shall be reviewed by the Zoning Administrator, and approved or denied on the basis of whether the proposed sign satisfies all requirements of this Article, and all other applicable laws, rules and regulations. If it does, then the permit shall be issued. If it does not, then the denial notice shall specify the point(s) of noncompliance. Decisions on sign permit applications shall be made in writing by the Zoning Administrator, and are subject to the appeal procedures provided herein. When applicable, permits under building and electrical codes then in effect are also required; sign permits may be approved subject to compliance with building and electrical code requirements.

6. COMPLETENESS

a. Initial review of an application will be for the purpose of determining if the application is complete. If the application is found incomplete, written notice of the finding of incompleteness will be given to the applicant within fifteen working days of submission, detailing the points of incompleteness. Notice is deemed effective when mailed or personally delivered. After notice of incompleteness, the applicant shall have thirty calendar days in which to resubmit the application, with all noted items of incompleteness cured. If the application is resubmitted within that time, no additional fee shall be required, and the application, if complete, shall then be processed in accordance with this Section. If no notice of incompleteness is timely provided, the application shall be deemed complete as of the last day on which the notice of incompleteness could have been given.

7. TIME FOR DECISION

a. The Zoning Administrator shall render a decision on each complete sign permit application within five working days of when the application was complete.

8. NONCOMPLIANCE WITH PERMIT

a. All signs shall conform to the requirements of the permit, and all other applicable laws. Any sign not erected or constructed as represented on the application upon which the permit was issued shall not be construed as a hardship case, but shall be construed as a misrepresentation of facts on the application and a violation of this Article. Any noncomplying sign which is not removed or corrected within the required time shall be a deemed public nuisances and a violation of the zoning ordinance, and may be abated in the same manner as any public nuisance or zoning ordinance violation.

SECTION 14.14 APPEALS

A. Decisions on sign permit applications, as well as directives, orders, notices and all other sign-related decisions of the Zoning Administrator may be appealed to the Board of Adjustment.

1. INITIATION OF APPEAL

a. An appeal under this Article may be initiated by following the procedures set forth in KRS §100.261, within the time allowed by that section.

2. HEARING ON APPEAL

a. Within 60 working days of timely receipt of a notice of appeal, the Board of Adjustment shall hear the appeal in an open, public, duly noticed hearing. The appellant and all other persons wishing to be heard shall be allowed to present evidence and argument. The Board will base its decision on the law and the evidence presented at the hearing. The Board will issue a written decision within 30 calendar days of the hearing, and the written decision shall state the decision and the facts and law supporting the decision.

3. WAIVER OF TIME

a. Any of the timeliness requirements of this Section may be waived by the appellant.

4. JUDICIAL REVIEW

a. The decision of the Board of Adjustment is final. Further review may be had in Kenton County Circuit Court, pursuant to the Kentucky law of civil procedure.

5. STATUS PENDING APPEAL

a. While any sign related matter is on appeal, the status quo of the subject sign(s) shall be maintained, except when, by virtue of physical condition, the sign poses an immediate threat to the public health, safety and welfare, in which case the threat may be abated in the same manner as any other immediate threat to the public health, safety and welfare.

SECTION 14.15 DEFINITIONS AND MEASUREMENTS

A. MEASUREMENTS

1. Area of Signs Other than Wall Signs

a. The gross surface area of a sign, except wall signs, is the entire area contained within a single continuous perimeter enclosing the extreme limits of such sign. For detached signs composed of more than one sign cabinet or module, the gross surface area shall include the sum of the area in each cabinet or module only. If a sign has more than one face, the gross surface area shall be equal to the maximum area of the sign face or faces visible from any ground position along any public right-of-way at any one time.

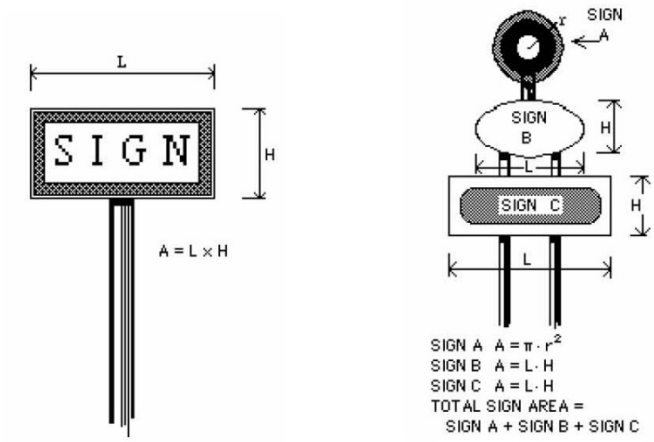

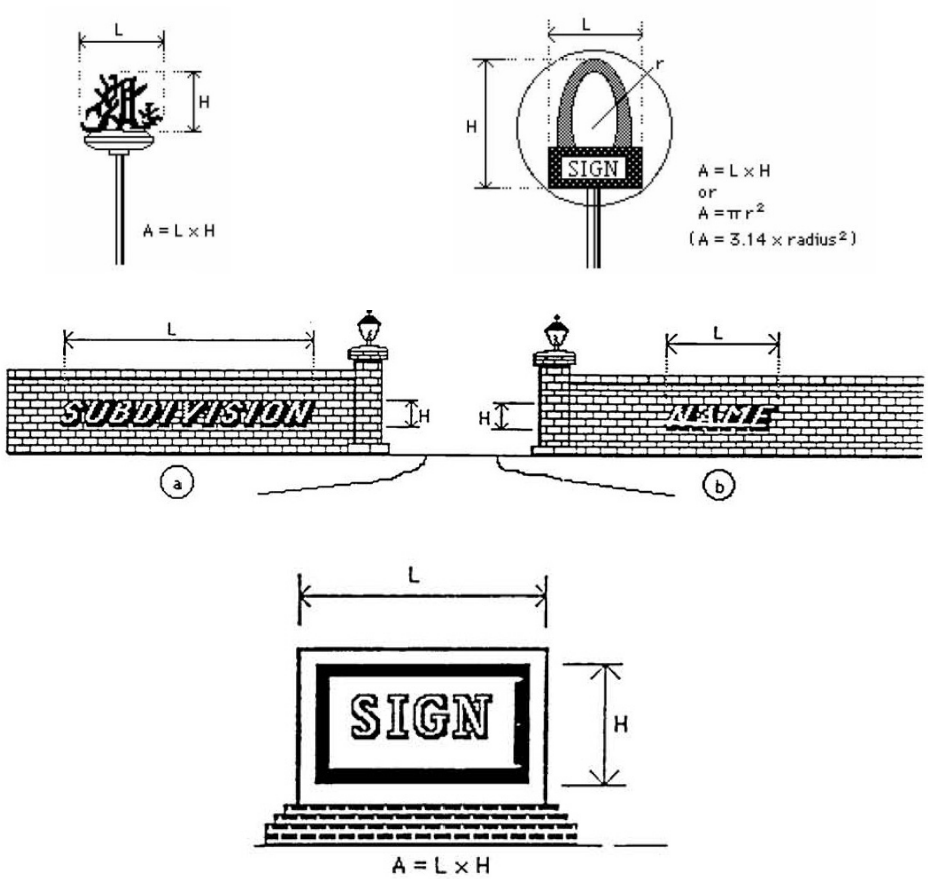

b. The perimeter of a sign will not include lighting fixtures, pole covers, landscaping, framing, decorative roofing, moldings or aprons or other architectural or decorative embellishments, provided they contain no written copy, logos or symbols.

2. Area of Wall Signs

a. The gross surface area of a wall sign is the entire area contained within a single continuous perimeter composed of any straight line geometric figure(s) which encloses the extreme limits of the advertising message(s). If the sign is composed of individual letters or symbols using the wall as the background with no added decoration, color or embellishment, the total sign area shall be calculated by measuring the area within the perimeter of each symbol or letter. The combined area of the individual figures shall be considered the total sign area.

3. Computation of Area of Multifaced Signs

a. The sign area for a sign with more than one face shall be computed by adding together the area of all sign faces visible from any one point. When two identical sign faces are placed back to back, so that both faces cannot be viewed from any point at the same time, and when such sign faces are part of the same sign structure and are not more than forty-two (42) inches apart, the sign area shall be computed by the measurement of one of the faces.

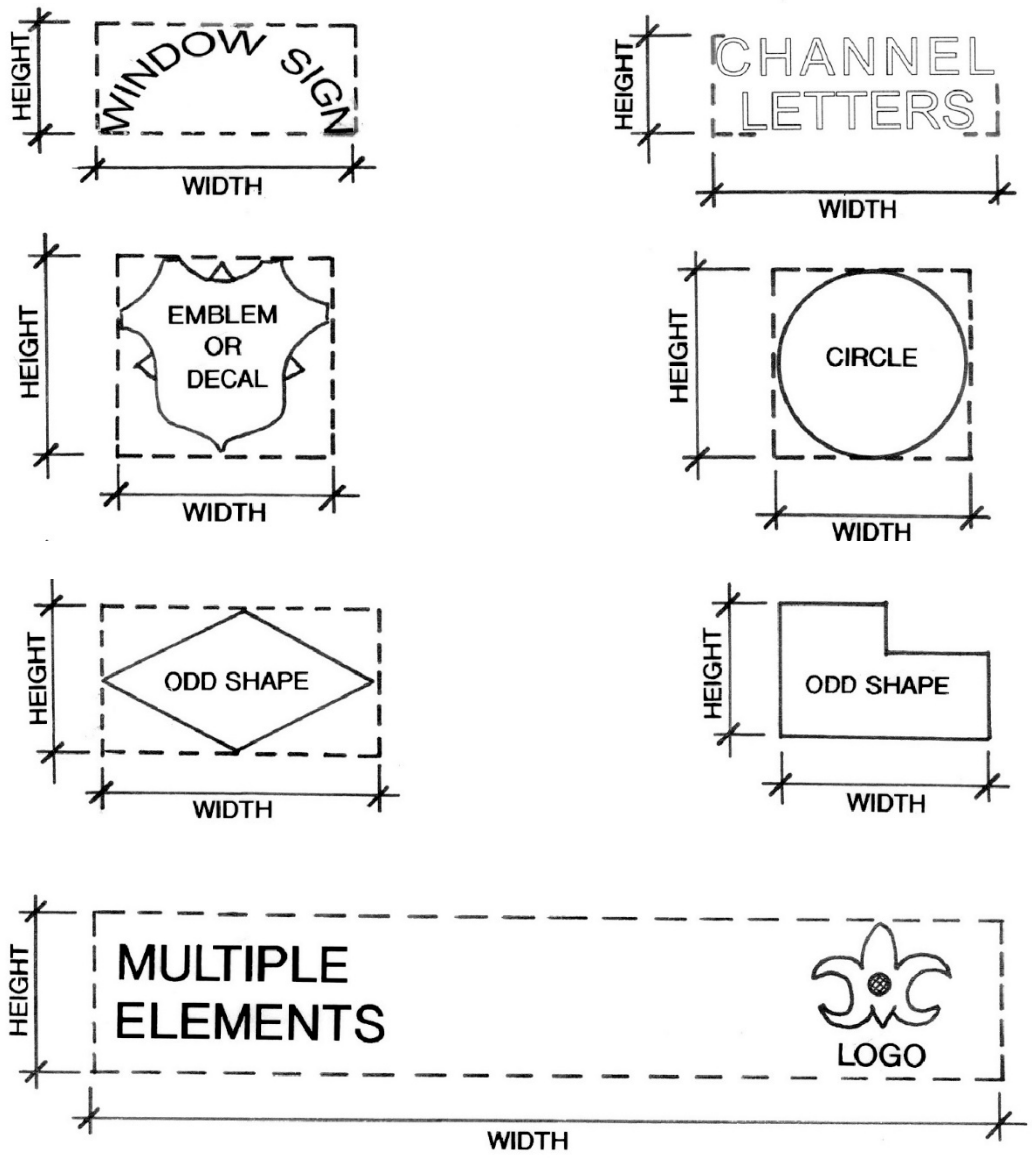

4. Measurement of Height of Sign

a. Sign height shall be measured from the elevation at the base of the sign to the highest point of the highest element of the sign, excluding any incidental structural element, such as an uplift cable for a projecting sign. Where the sign is located on a mound or berm, the average elevation of the land 20 feet to each side of the sign shall be used as a basis for measuring height.

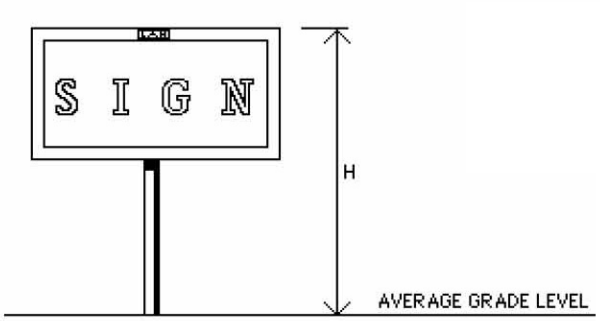

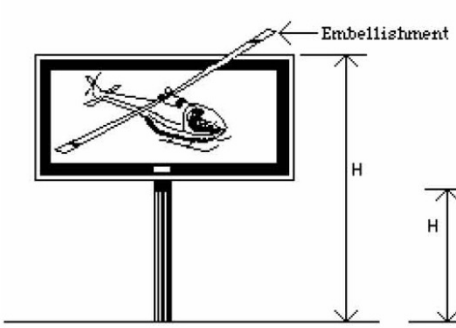

fig. 3
HEIGHT OF SIGN

fig. 4
HEIGHT OF SIGN

SECTION 14.16 POLICIES AND RULES OF CONSTRUCTION

A. This Article shall be administered, enforced and construed in accordance with the following policies.

1. DISCRETIONARY REVIEW

a. When one or more signs are part of a project or development, or a variance, conditional use permit, exception or special use permit is sought for sign(s), which requires discretionary review, then the

sign shall be reviewed without regard to the graphic design or visual image on the display face of the sign, and discretion shall be restricted to structural, location and other non-communicative aspects of the sign. This provision does not override the billboard policy.

2. MESSAGE NEUTRALITY

   a. It is the City of Elsmere policy to regulate signs in a constitutional manner.

3. REGULATIONS ON OFF-SITE MESSAGES

   a. This Article distinguishes in some cases between commercial messages that relate to products or services not offered at the location of the sign ("off-site commercial messages"). The purpose of that distinction is to acknowledge the need of businesses for identification and notice of their businesses at a business location while limiting the proliferation of commercial messages generally. There is no intent to limit noncommercial messages in any way with this distinction.

4. BILLBOARD POLICY

   a. New billboards, as defined herein, are prohibited. The City of Elsmere completely prohibits the construction, erection or use of any billboards, other than those which legally exist within the regulatory zoning jurisdiction of the City of Elsmere, or for which a valid permit has been issued and has not expired, as of the date on which this provision is first adopted. No permit shall be issued for any billboard which violates this policy, and the City of Elsmere will take immediate enforcement or abatement action against any billboard constructed or maintained in violation of this policy. In adopting this provision, the City of Elsmere affirmatively declares that it would have adopted this billboard policy even if it were the only provision in this Article. The City of Elsmere intends for this billboard policy to be severable and separately enforceable even if other provision(s) of this Article may be declared, by a court of competent jurisdiction, to be unconstitutional, invalid or unenforceable.

5. MESSAGE SUBSTITUTION

   a. Subject to the property owner's consent, a noncommercial message of any type may be substituted in whole or in part for the

message displayed on any sign for which the sign structure or mounting device is legal without consideration of message content. Such substitution of message may be made without any additional approval or permitting. The purpose of this provision is to prevent any inadvertent favoring of commercial speech over noncommercial speech, or favoring of any particular noncommercial message over any other noncommercial message. In addition, any on-site commercial message may be substituted, in whole or in part, for any other on-site commercial message, provided that the sign structure or mounting device is legal without consideration of message content. This provision does not create a right to increase the total amount of signage on a parcel, lot or land use; does not affect the requirement that a sign structure or mounting device be properly permitted; does not allow a change in the physical structure of a sign or its mounting device; and does not allow the substitution of an off-site commercial message in place of an on-site commercial message or a noncommercial message.

6. REGULATORY INTERPRETATIONS

a. All regulatory interpretations of this Article are to be exercised in light of the City of Elsmere message neutrality and message substitution policies. Where a particular type of sign is proposed in a permit application, and the type is neither expressly allowed nor prohibited by this Article, or whenever a sign does not qualify as a “structure” as defined in the building code then in effect, then the Zoning Administrator shall approve, conditionally approve or disapprove the application based on the most similar sign type that is expressly regulated by this Article, in light of the policies stated in this Section.

7. NONCOMMUNICATIVE ASPECTS

a. All rules and regulations concerning the non-communicative aspects of signs, such as location, size, height, illumination, spacing, orientation, etc., stand enforceable independently of any permit or approval process.

8. MIXED USE ZONES AND OVERLAY ZONES

a. In any zone where both residential and non residential uses are allowed, the sign-related rights and responsibilities applicable to any particular parcel or land use shall be determined as follows: (1) if specific sign regulations are provided in the zoning district, those regulations shall be applied; or (2) if no sign regulations are

provided in the zoning district, residential uses shall be treated as if they were located in a zone where a use of that type would be allowed as a matter of right, and nonresidential uses shall be treated as if they were located in a zone where that particular use would be allowed, either as a matter of right or subject to a conditional use permit or similar discretionary process.

9. PROPERTY OWNER'S CONSENT

a. No sign may be displayed without the consent of the legal owner(s) of the property on which the sign is mounted or displayed. For purposes of this policy, "owner" means the holder of the legal title to the property and all parties and persons holding a present right to possession, control or use of the property. The signature of the property owner or authorized agent will be required on all applications for sign permits.

10. LEGAL NATURE OF SIGN RIGHTS

a. As to all signs attached to real property, the signage rights, duties and obligations arising from this Article attach to and travel with the land or other property on which a sign is mounted or displayed. This provision does not modify or affect the law of fixtures, sign-related provisions in private leases regarding signs (so long as they are not in conflict with this Article or other law), or the ownership of sign structures. This provision does not apply to hand held signs or other images which are aspects of personal appearance.

11. SEVERABILITY

a. Generally

(1) If any part, section, subsection, paragraph, subparagraph, sentence, phrase, clause, term, or word of this Article is declared unconstitutional by the valid judgment or decree of any court of competent jurisdiction, the declaration of such unconstitutionality shall not affect any other part, section, subsection, paragraph, subparagraph, sentence, phrase, clause, term or word of this Article, except as limited by Section 14.16, A., 11., b.

b. Severability Where Less Speech Results

(1) Without diminishing or limiting in any way the declaration of severability set forth above in subsection A of this Section or

elsewhere in this Article or this Code, if any part, section, subsection, paragraph, subparagraph, sentence, phrase, clause, term or word of this Article is declared unconstitutional, such declaration shall not affect any other part, section, subsection, paragraph, subparagraph, sentence, phrase, clause, term or word of this Article, even if such severability would result in a situation where there would be less speech, whether by subjecting previously exempt signs to permitting or otherwise additional standards.

c. Severability of Provisions Pertaining to Prohibited Signs

(1) Without diminishing or limiting in any way the declaration of severability set forth above in subsection A of this Section, or elsewhere in this Article or in this Code, if any part, section, subsection, paragraph, subparagraph, sentence, phrase, clause, term or word of this Article or any other laws declared unconstitutional by valid judgment or decree of any court of competent jurisdiction, the declaration of such unconstitutionality shall not affect any other part, section, subsection, paragraph, subparagraph, sentence, phrase, clause, term or word of this Article that pertains to prohibited signs, including specifically those signs and sign types prohibited and not allowed under Section 14.5 of this Article. Furthermore, if any part, section, subsection, paragraph, subparagraph, sentence, phrase, clause, term or word of this Article or of any part of the Zoning Ordinance is declared unconstitutional by the valid judgment or decree of any court of competent jurisdiction, the declaration of such unconstitutionality shall not affect any other part, section, subsection, paragraph, subparagraph, sentence, phrase, clause, term or word of this Article, except as expressly provided in Section 14.16, A., 11., b.

d. Severability of Prohibition on Off-premise Signs

(1) If any part section, subsection, paragraph, subparagraph, sentence, phrase, clause, term or word of this Article and/or an other provisions of this Article or other provisions of Zoning Ordinance or this Code are declared invalid or unconstitutional by the valid judgment or decree of any court of competent jurisdiction, the declaration of such unconstitutionality shall not affect the limitations on off-premise signs as contained herein.